Pablo®

GLOSS

ASSEMBLY & INSTALLATION INSTRUCTIONS

INFO@PABLODESIGNS.COM
888 MARIN STREET
SAN FRANCISCO, CA
94124

PABLODESIGNS.COM

APPROVED COMPONENTS

Pablo®

GLOSS

FLOOR ASSEMBLY

BULB TYPE
2X 120V/35W (35W MAX) MR16 BI-PIN CFL40

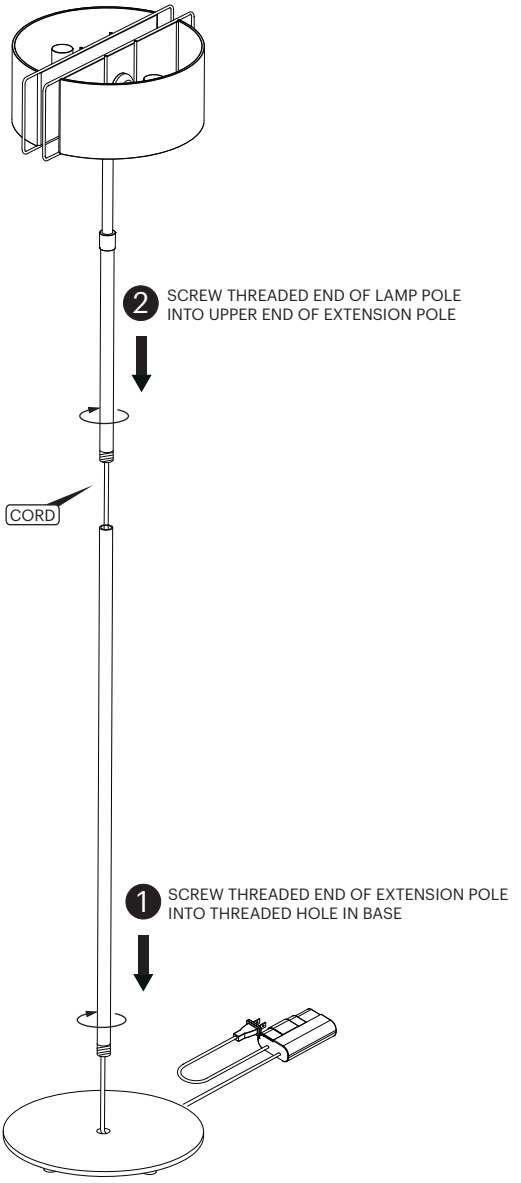

Pablo®

GLOSS

TABLE ASSEMBLY

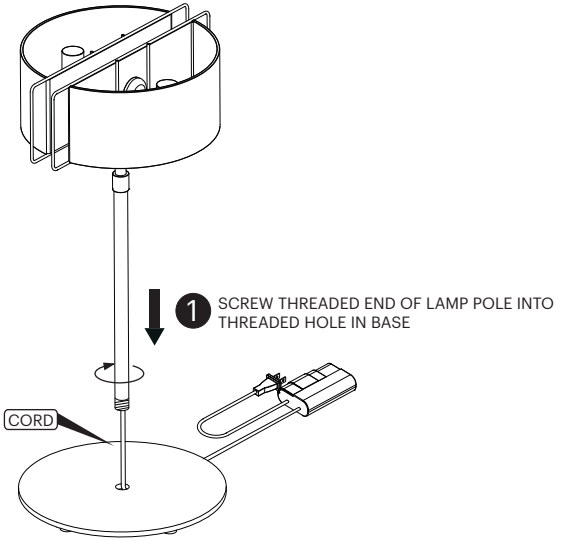

ADJUSTMENT

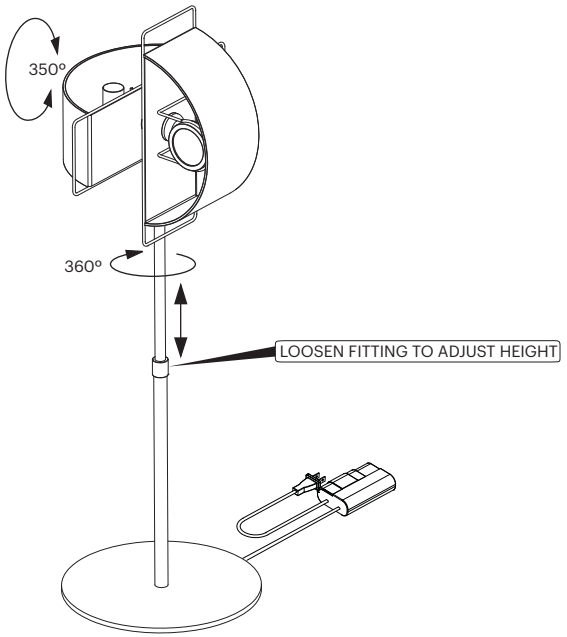
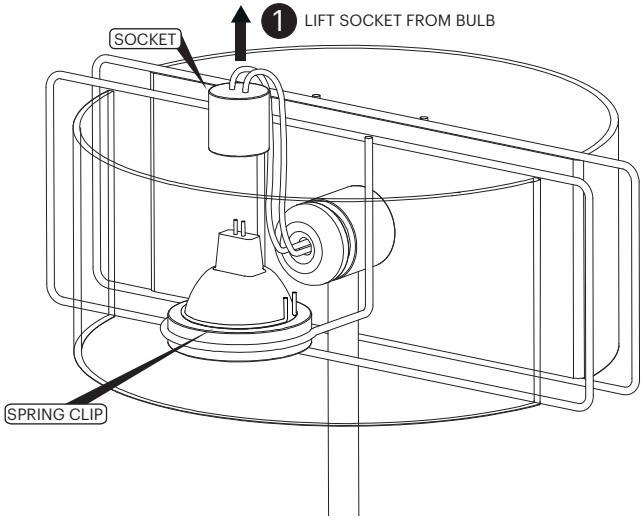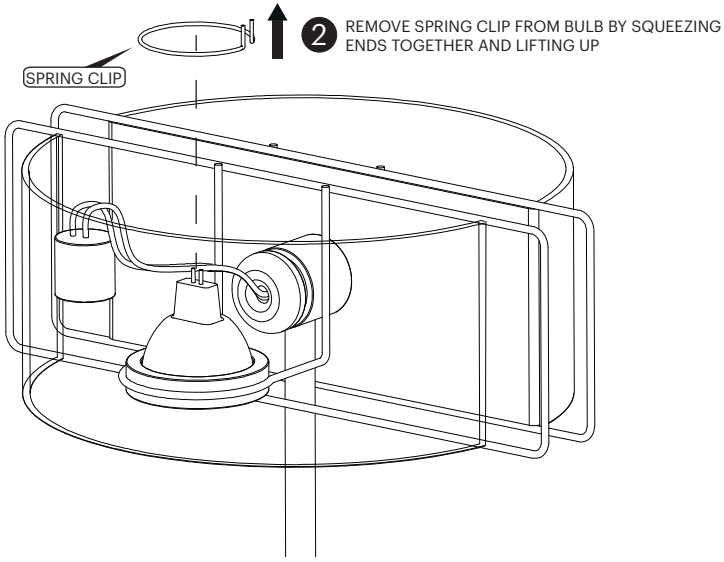
BULB REPLACEMENT